WWW.VALTORC.COM
SALES@VALTORC.COM
1 (866) VALTORC

STAINLESS STEEL PNEUMATIC ACTUATORS SERIES SSPA-10

- ASTM316L、316、304、303 stainless steel pneumatic actuator with electro-polish finish offer excellent resistance to most corrosive chemicals as well as industrial atmospheres.
- Dual piston rack and pinion design for compact construction, symmetric mounting position, high-cycle life and fast operation, reverse rotation can be accomplished in the field by simply inverting the pistons.
- Multiple bearings and guides on racks and pistons, low friction, high cycle life and prevent shaft blowout.
- Modular preloaded spring cartridge design, with coated spring for simple versatile range, greater safely and corrosion resistance, longer cycle life.
- Fully machined teeth on piston and pinion for accurate low backlash rack and pinion engagement, maximum efficiency.
- The two independent external travel stop adjustment bolts can adjust ±5°at both open and close directions easily and precisely.
- Stainless steel fasteners for long term corrosion resistance.
- Full conformance to the latest specifications:ISO5211, DIN3337 and Namur or product interchangeability and easy mounting of solenoids, limit switches and other accessories.

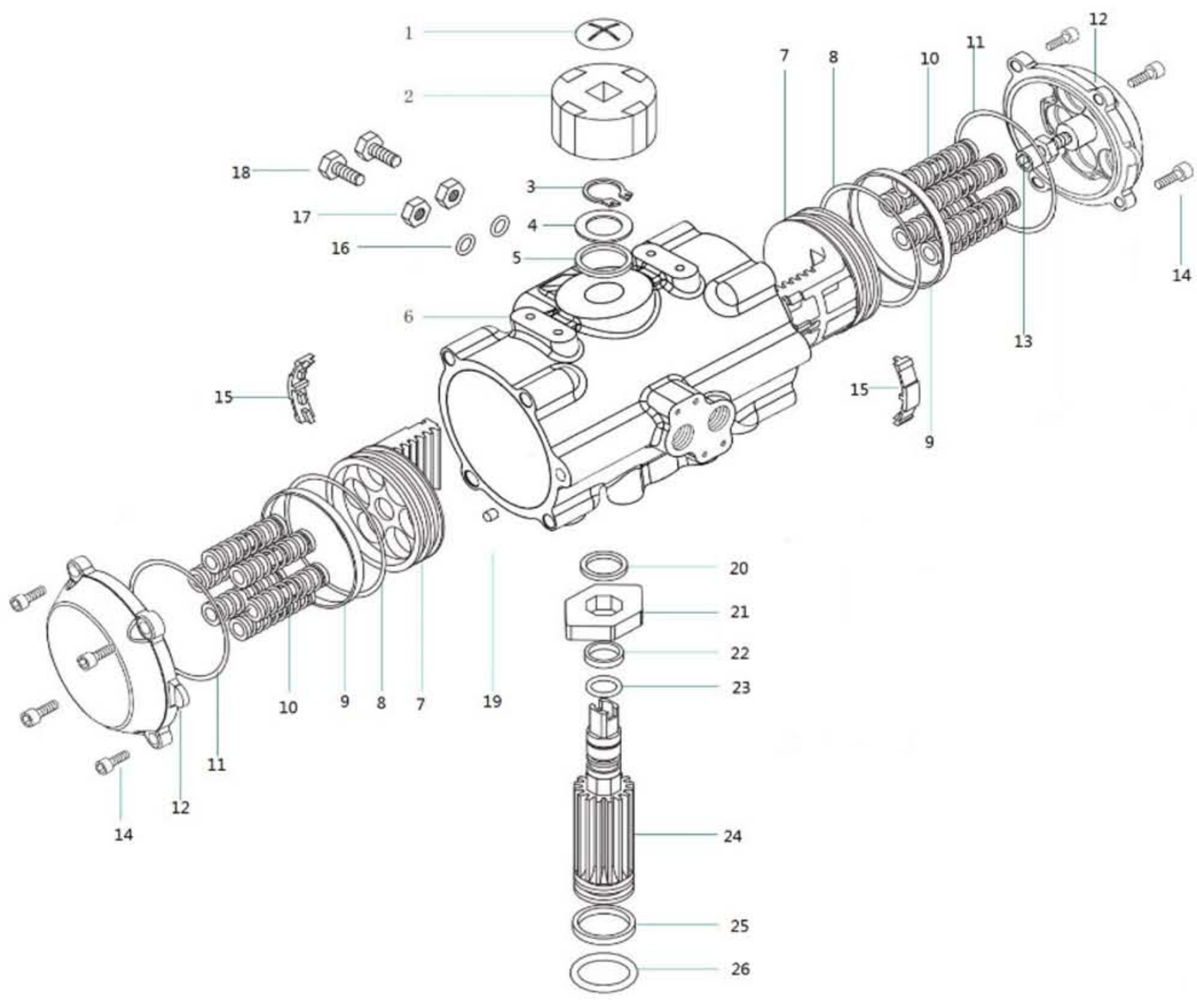

NO.	Description	Qty.	Standards Material
1	Indicator Screw	1	Plastic
2	Indicator	1	Plastic
3	Snap Ring	1	Stainless steel
4	Washer	1	Stainless steel
5	Outside Washer	1	Engineering Plastics
6	Body	1	Stainless steel
7	Piston	2	Stainless steel
8	Piston O-ring	2	Viton/NBR
9	Piston Bearing	2	Engineering Plastics
10	Spring Spring Retainer(L,R) Retainer Connector	0-12	Spring Steel Nylon 66 Brass
11	End-Cap O-ring	2	Viton/NBR
12	End-Cap	2	Stainless steel
13	Stop screw	2	Stainless steel
14	End-Cap Stop Screw	8	Stainless steel
15	Guide Piston	2	Nylon 66
16	O-ring	2	NBR
17	Nut	2	Stainless steel
18	Adjust screw	2	Stainless steel
19	Plug	2	NBR
20	Inside Washer	1	Engineering Plastics
21	Cam	1	Stainless steel
22	Bearing Top	1	Engineering Plastics
23	O-ring(Top)	1	Viton/NBR
24	Pinion	1	Stainless steel
25	Bearing Bottom	1	Engineering Plastics
26	O-ring Bottom	1	Viton/NBR

Operating Principle

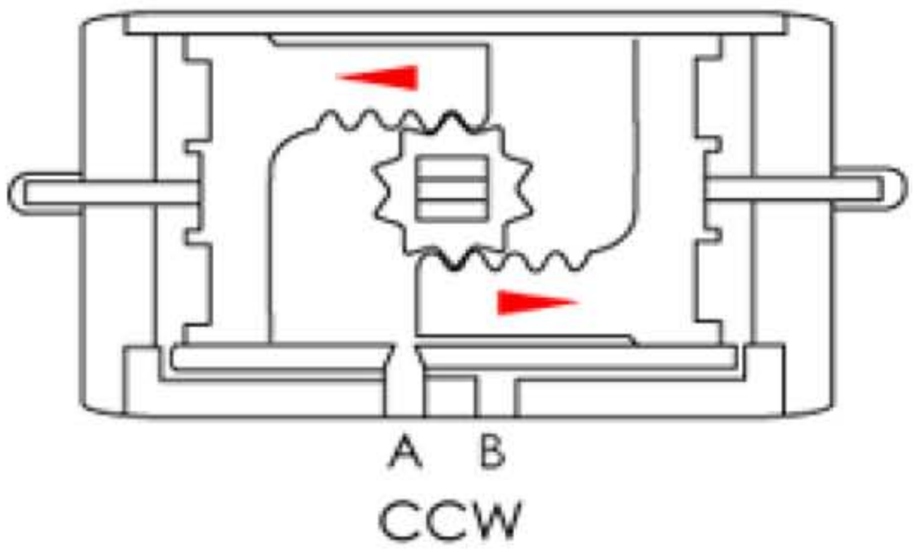

Air to Port A forces the pistons outwards, causing the pinion to turn counterclockwise while the air is being exhausted from Port B.

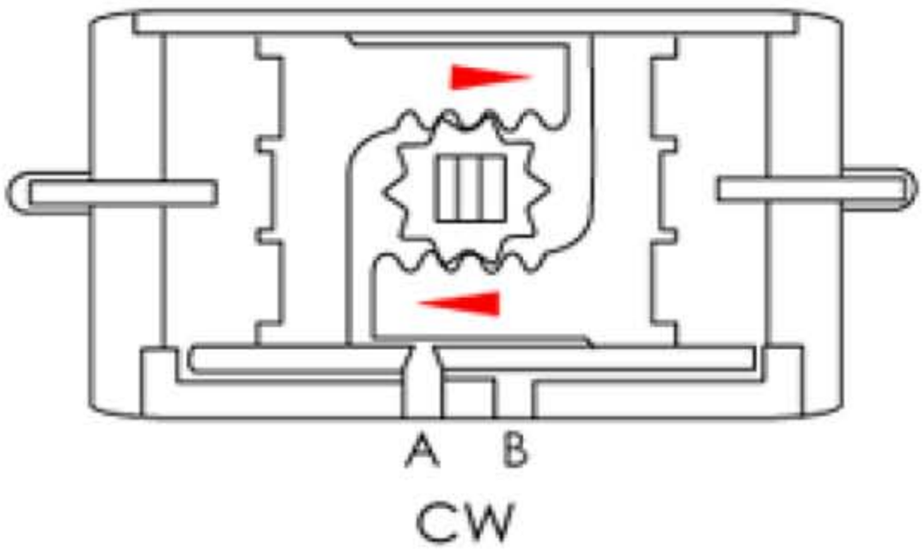

Air to Port B forces the pistons inwards, causing the pinion to turn clockwise while the air is being exhausted from Port A.

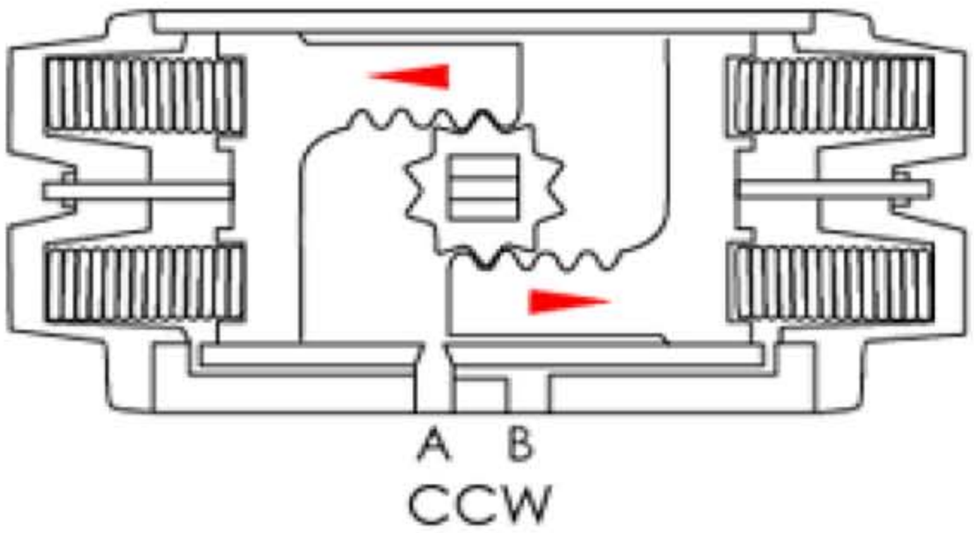

Air to Port A forces the pistons outwards, causing the springs to compress, The pinion turns counter-clockwise while air is being exhausted from Port B.

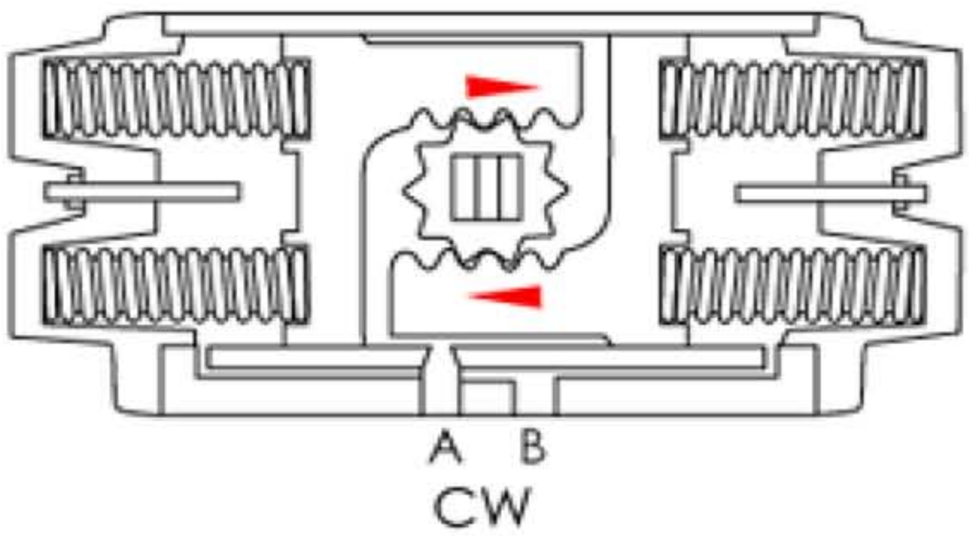

Loss of air pressure, the stored energy in the springs forces the pistons inwards, the pinion turns clockwise while air is being exhausted from Port A.

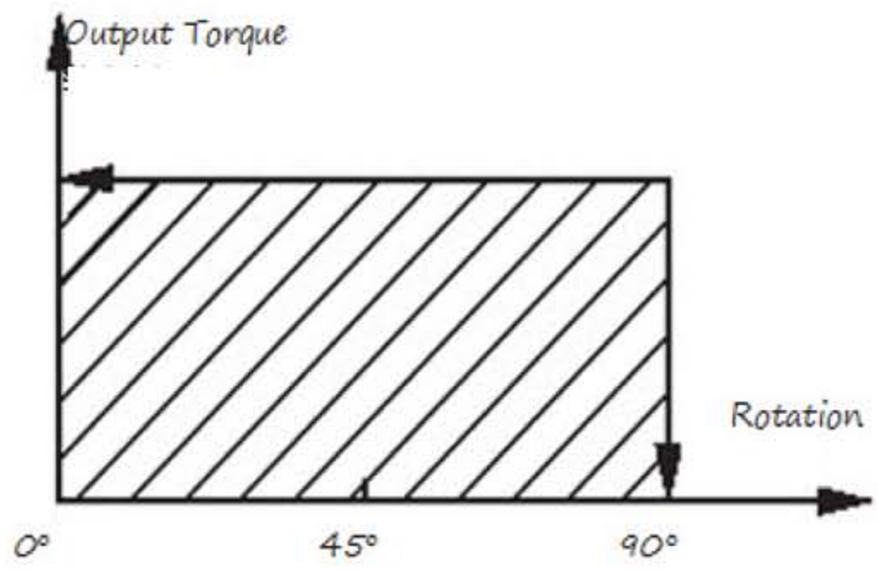

Output Torque Table of Pneumatic Actuators with Double Acting

Model	Air pressure(Bar)					
	3.0	4.0	5.0	6.0	7.0	8.0
SSPA-DA-20	12.0	16.0	20.0	24.0	28.0	32.0
SSPA-DA-30	21.7	28.9	36.1	43.3	50.6	57.8
SSPA-DA-40	42.8	57.0	71.3	85.5	99.8	114.0
SSPA-DA-50	97.7	130.3	162.9	195.5	228.0	260.6
SSPA-DA-60	173.3	231.0	288.8	346.5	404.3	462.0
SSPA-DA-70	260.7	347.6	434.5	521.4	608.3	695.2
SSPA-DA-80	397.2	529.6	662.0	794.4	926.8	1059.2
SSPA-DA-90	798	1064	1330	1596	1862	2128

Sizing: Spring Return Actuators

The suggested safety factor for double acting actuators under normal working conditions is 20%-30%.

Example:

The torque needed by valve=100N.m

The torque considered safety factor (1+30%)=130N.m

——————————————— Air Supply=5Bar

Output Torque of Pneumatic Actuator with Spring Return

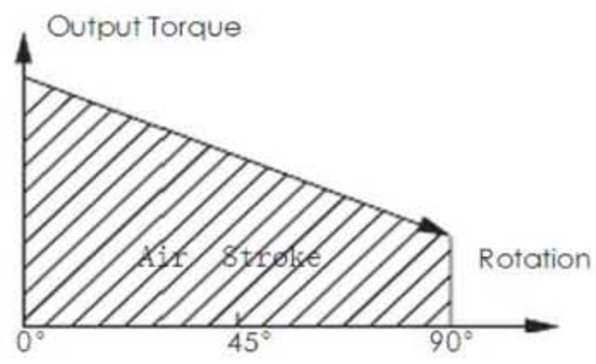

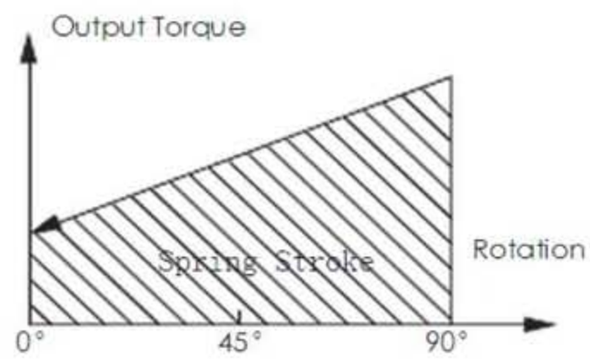

Output Torque of Pneumatic Actuator with Spring Return														
Model	Spring Qty	Springs' output		Air pressure (bar)										
				3.0		4.0		5.0		6.0		7.0		
				Output Torque of Air to Springs (Nm)										
		0°	90°	0°	90°	0°	90°	0°	90°	0°	90°	0°	90°
		Start	End	Start	End	Start	End	Start	End	Start	End	Start	End
SSPA-52SR	5	4.0	6.2	8.1	5.8	12.1	9.8						
	6	4.7	7.4	7.3	4.6	11.3	8.6						
	7	5.5	8.7	6.5	3.3	10.5	7.3	14.5	11.3				
	8	6.3	9.9			9.7	6.1	13.7	10.1				
	9	7.1	11.2			8.9	4.8	12.9	8.8	16.9	12.8		
	10	7.9	12.4			8.1	3.6	12.1	7.6	16.1	11.6	20.1	15.6
	11	8.7	13.6			7.3	2.4	11.3	6.4	15.3	10.4	19.3	14.4
	12	9.5	14.9					10.5	5.1	14.5	9.1	18.5	13.1
SSPA-63SR	5	6.8	10.4	14.9	11.3	22.1	18.5						
	6	8.2	12.5	13.5	9.2	20.7	16.4						
	7	9.6	14.6	12.1	7.1	19.3	14.3	26.5	21.5				
	8	10.9	16.7			18.0	12.2	25.2	19.4				
	9	12.3	18.9			16.6	10.0	23.8	17.2	31.1	24.5		
	10	13.7	20.9			15.2	8.0	22.4	15.2	29.7	22.5	36.9	29.7
	11	15.0	22.9					21.1	13.2	28.4	20.5	35.6	27.7
	12	16.4	25.0					19.7	11.1	27.0	18.4	34.2	25.6
SSPA-83SR	5	14.8	20.6	28.1	22.3	42.3	36.5						
	6	17.7	24.7	25.1	18.1	39.3	32.3						
	7	20.7	28.8			36.4	28.3	50.7	42.5				
	8	23.6	32.9			33.4	24.1	47.7	38.4				
	9	26.6	37.0			30.5	20.0	44.8	34.3	59.0	48.5		
	10	29.5	41.1			27.5	15.9	41.8	30.2	56.0	44.4	70.3	58.7
	11	32.5	45.2					38.9	26.1	53.1	40.3	67.4	54.6
	12	35.4	49.3					35.9	22.0	50.1	36.2	64.4	50.5
SSPA-105SR	5	31.8	49.3	66.0	48.4	98.6	81.0						

SSPA-105SR	6	38.1	59.2	59.6	38.5	92.2	71.1						
	7	44.5	69.0			85.9	61.3	118.5	93.9				
	8	50.8	78.9			79.5	51.4	112.1	84.0				
	9	57.2	88.7			73.2	41.6	105.8	74.2	138.4	106.8		
	10	63.5	98.6			66.8	31.7	99.4	64.3	132.0	96.9	164.5	129.4
	11	69.9	108.5					93.1	54.4	125.7	87.0	158.2	119.5
	12	76.2	118.3					86.7	44.6	119.3	77.2	151.8	109.7
SSPA-125SR	5	52.5	86.3	121	87	179	145						
	6	63.0	103.5	110	70	168	128						
	7	73.5	120.8			158	110	215	168				
	8	84.0	138.0			147	93	205	151				
	9	94.5	155.3			137	76	194	134	252	191		
	10	105.0	172.5			126	59	184	116	242	174	299	232
	11	115.5	189.8					173	99	231	157	289	214
	12	126.0	207.0					163	82	221	140	278	197
SSPA-140SE	5	86.0	129.0	174	131	261	218						
	6	103.2	154.8	157	105	244	192						
	7	120.4	180.6			227	166	314	253				
	8	137.6	206.4			209	141	296	228				
	9	154.8	232.2			192	115	279	202	366	289		
	10	172.0	258.0			175	89	262	176	349	263	436	350
	11	189.2	283.8					245	150	332	237	585	324
	12	206.4	309.6					228	124	315	211	402	298
SSPA-160SR	5	139.5	192.5	258	205	390	337						
	6	167.4	231.0	230	166	362	298						
	7	195.3	269.5			334	260	467	393				
	8	223.2	308.0			306	221	439	354				
	9	251.1	346.5			278	183	411	316	543	448		
	10	279.0	385.0			250	144	383	277	515	409	647	541
	11	306.9	423.5					355	239	487	371	619	503
	12	334.8	462.0					327	200	459	332	591	464
SSPA-210SR	5	261	440	619	439	912	732						
	6	313	528	566	351	859	644						
	7	365	616			807	556	1101	850				
	8	417	704			755	468	1049	762				
	9	469	792			703	380	997	674	1290	967		
	10	521	880			651	292	945	586	1238	879	1531	1172
	11	573	968					893	498	1186	791	1479	1084
	12	625	1056					841	410	1134	703	1427	996

Sizing: Spring Return Actuators

The suggested safety factor for spring return actuator under normal working conditions is 30-50%

Example:

The torque needed by valve=80N.m

The torque consider safety factor (1+30%)=104 N.m——————————————Air Supply=5Bar

Air stroke 0°=308N.m

Air stroke 90°=247N.m

Spring stroke 90°=181N.m

Spring stroke 0°=120N.m

All the output torque is larger than we needed.

Attention:

During the restoration, the spring return actuators' output torque will not be affected by the inputing air from the port B. On the contrary, it will help the restoration of springs.

Operating Conditions

1. Operating media

Dry or lubricated air, the non-corrosive gases or oil.

2. Air supply pressure

Double acting: 2～8 Bar; Spring return: 2～8 Bar

3. Operating temperature

Standard: -20℃～+80℃

Low temperature: -40℃～+80℃

High temperature: -20℃～+150℃

4. Travel adjustment

Have adjustment range of ±4°for the rotation at 90°

5. Lubrication

Under normal operating condition, need not accrete lubricant

6. Application

Either indoor or outdoor

7. Highest pressure

The maximum input pressure is 10 Bar

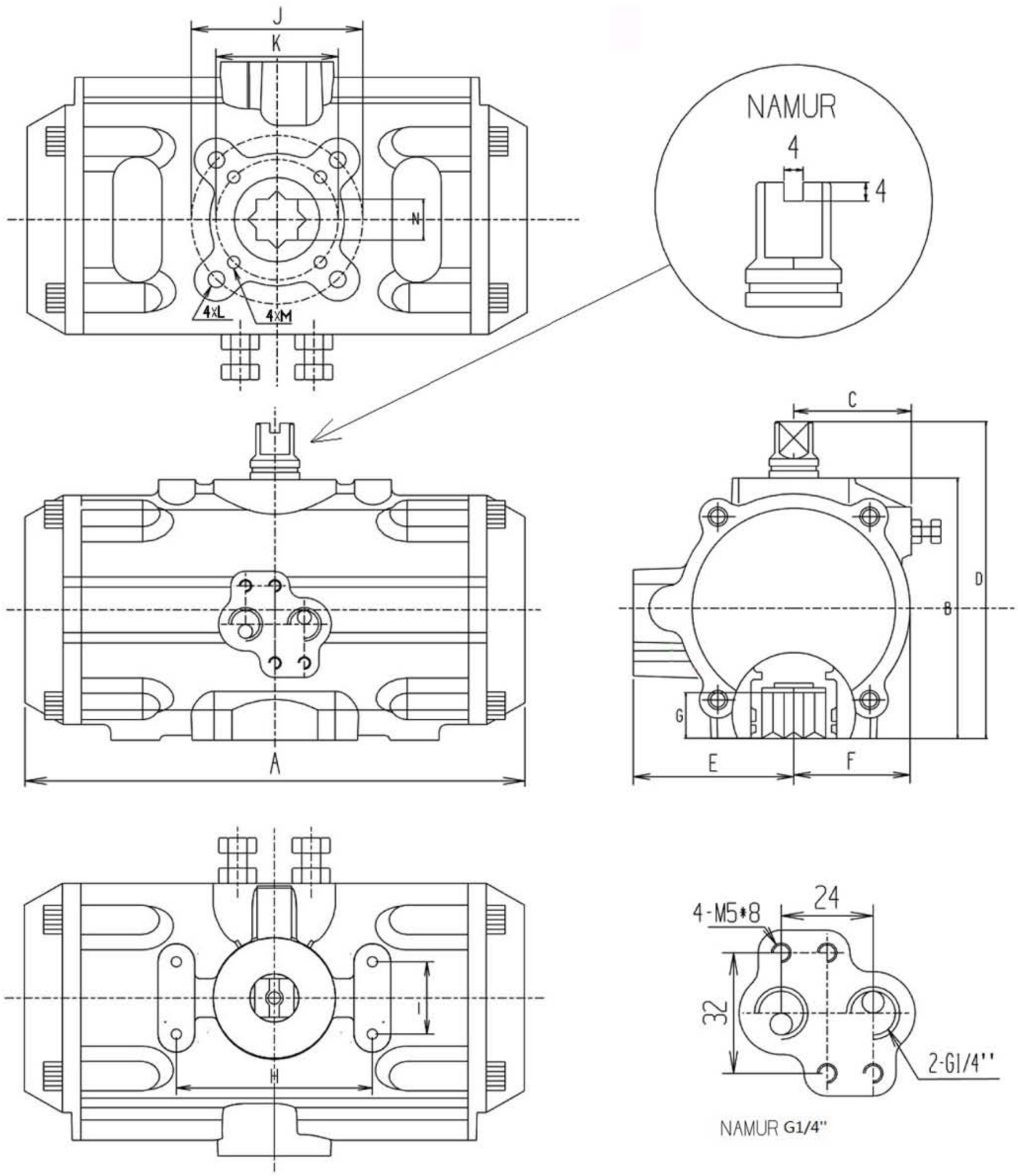

Model	A	B	C	D	E	F	G	H	I	N	J	K	L	M	Air Connection
SSPA-52	146	72	30	92	47	32	14	80	30	11	Φ50	Φ36	M6*10 (1/4" -20UNC)	M5*7.5(#10-24UNF)	G1/4"
SSPA-63	173	88	36	108	54	38	18	80	30	14	Φ70	Φ50	M8*13(5/16" -18UNC)	M6*10(1/4" -20UNC)	G1/4"
SSPA-83	204	108	48	128	65.5	48	21	80	30	17	Φ70	Φ50	M8*13(5/16" -18UNC)	M6*10(1/4" -20UNC)	G1/4"
SSPA-105	270	133	50	153	77	60	26	80	30	22	Φ102	Φ70	M10*16(3/8" -16UNC)	M8*13(5/16"-18UNC)	G1/4"
SSPA-125	302	155	58	175	87	69.5	27.5	80	30	22	Φ102	Φ70	M10*16(3/8" -16UNC)	M8*13(5/16"-18UNC)	G1/4"
SSPA-140	394	172	69	192	95.5	77	32	80	30	27	Φ125	Φ102	M12*20(1/2" -12UNC)	M10*16(3/8"-16UNC)	G1/4"
SSPA-160	456	198	75	218	106	87	34	80	30	27	Φ125	Φ102	M12*20(1/2" -12UNC)	M10*16(3/8"-16UNC)	G1/4"
SSPA-210	568	257	90	287	133	113	40	130	30	36	Φ140		M16*24(5/8" -11UNC)		G1/4"